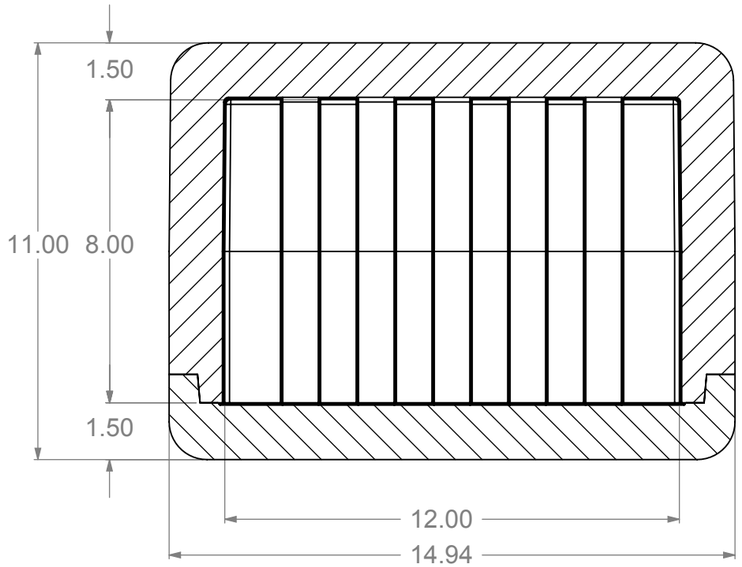

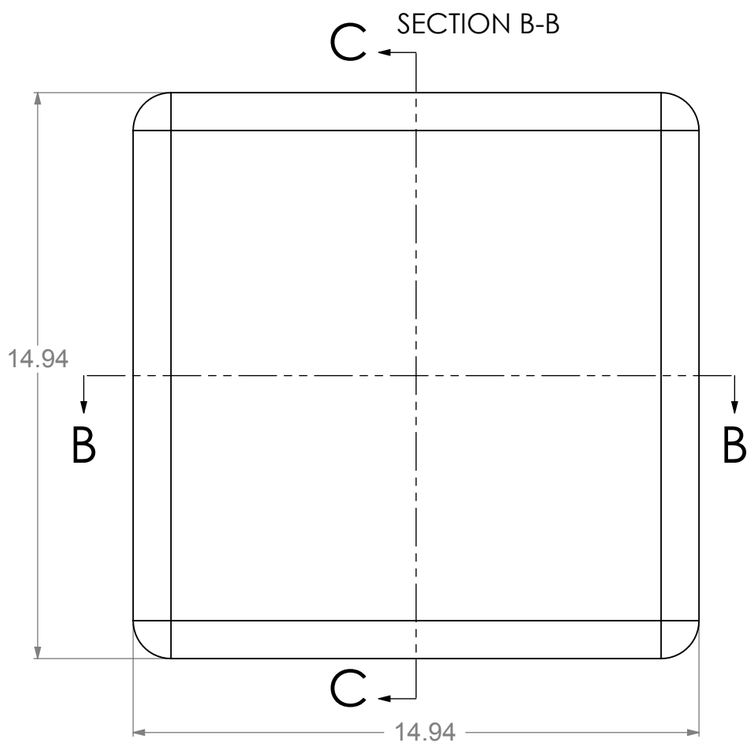

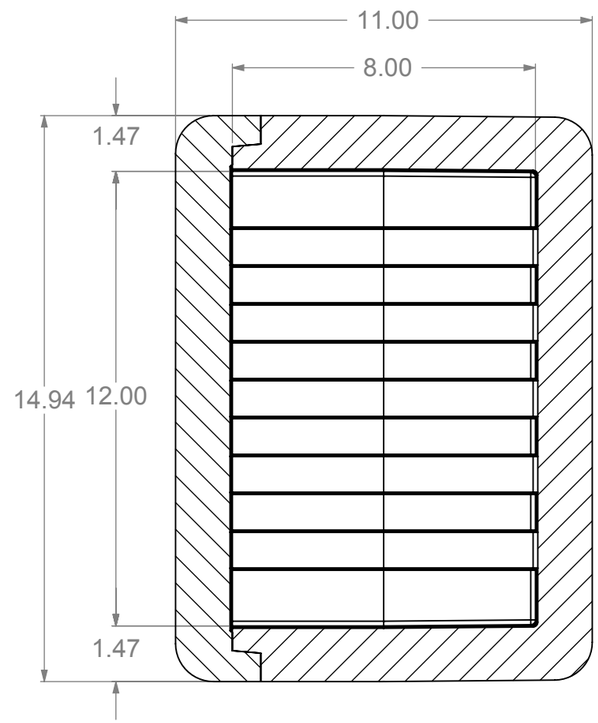

SECTION C-C

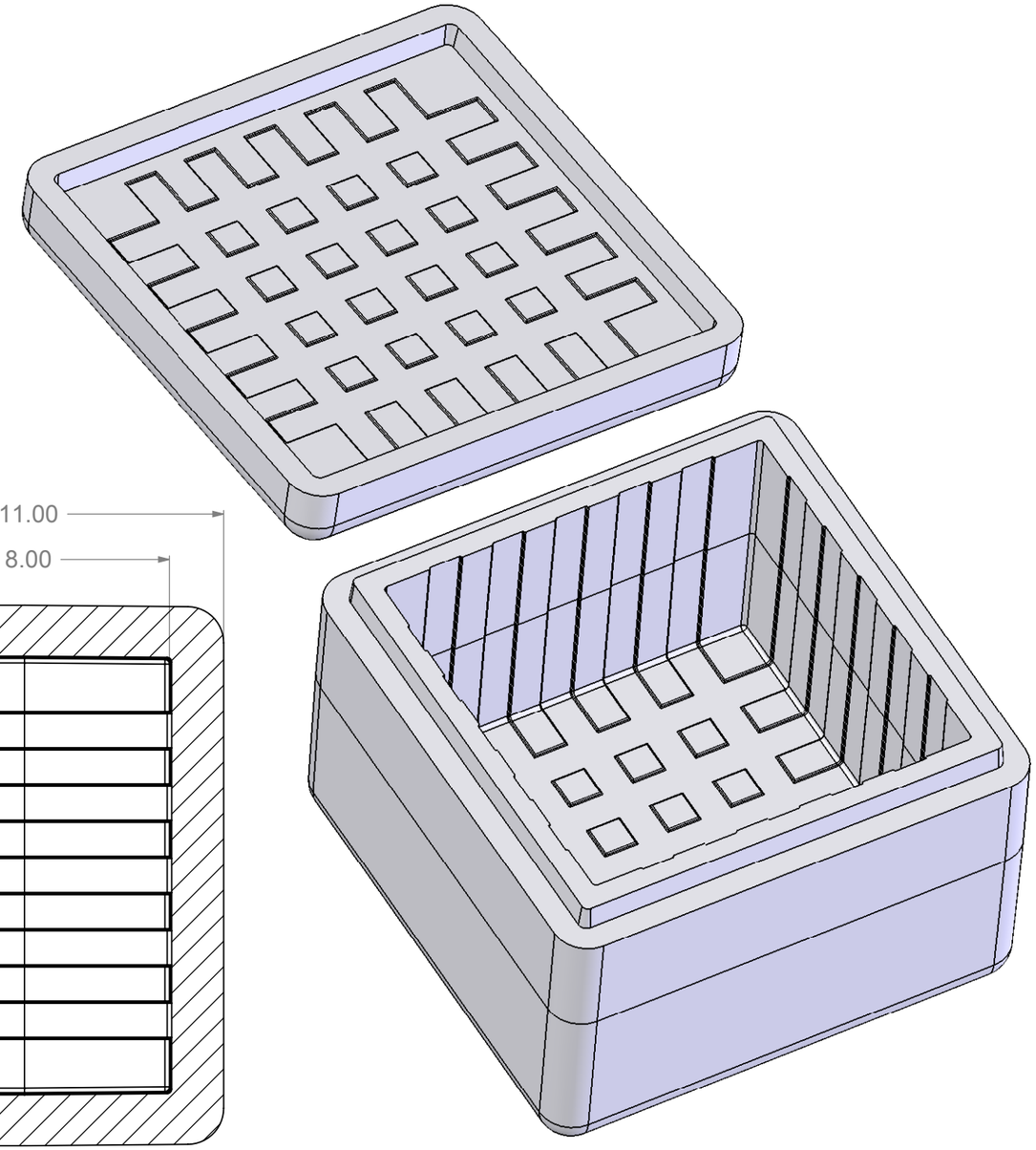

STANDARD EPS TOLERANCES
FOR DENSITY 1.12 TO 3.0 PCF

DIM. INCH(MM)	TOL. INC(MM)
0.0 - 6.0"(152)	+/- .039 (1)
6.0(152) - 12.0 (305)	+/- .06 (1.5)
12.0(305) - 24.0(610)	+/- .098 (2.5)
24.0(610) - 48.0(1220)	+/- .12 (3)
48.0(1220) - GREATER	+/- .20 (5)

PROPRIETARY AND CONFIDENTIAL

THE INFORMATION CONTAINED IN THIS DRAWING IS THE SOLE PROPERTY OF **marko foam production** ANY REPRODUCTION IN PART OR AS A WHOLE WITHOUT THE WRITTEN PERMISSION OF **marko foam production** IS PROHIBITED.

MATERIAL: EPS 1.25 PCF

FINISH:

DO NOT SCALE DRAWING

	NAME	DATE
DRAWN		
CHECKED		
ENG APPR.	Ilir Bordoniqi	10/29/10
MFG APPR.		
Q.A.		

COMMENTS:
V_B - 895
V_L - 348

marko foam products inc

IC - 1152

SIZE: A | DWG. NO.: CM5231 - K1014 - 6/3 | REV.

SCALE:1:4 | WEIGHT: | SHEET 1 OF 1